c a t a l o g u e

130 Years

DRILLING AND OFFROAD
M A C H I N E R Y

GEOMASH

GEOMASH

Contents

Geomash today

The Geomash company is one of the leading producers in Russia on production of drilling rigs capable to provide different technologies of drilling.

Production of drilling equipment - is the traditional activity field of the company.
In 2015 "Geomash" celebrates 130 years. For the 130-year history of the company a lot of things changed, invariable was only one - our aspiration to create drilling equipment capable to provide effective drilling for our partners.

Today the company has more than 1000 employees, production sites are located in the cities of Shchigra and Zheleznogorsk of Kursk region, Vladimir, Nordkhauzen (Germany).

Quality of production is enhanced, new production technologies are implemented, production equipment is upgraded.

Own construction bureau, considerable experience in design, project development of drilling equipment and special-purpose machines, allows "Geomash" to create machinery which is most oriented on solution of customers production tasks.

In 2011 "Lutz Kurth" - German producer specializing on production of small-size boring machines and boring carriages became a part of the Geomash company.

In 2014 the company started release of offroad vehicles and machines for recultivation of petropolluted lands.

From history of the company

The first mention of the company was in the year 1885 when in the village of Snytkino, the Troitsk volost of the Shchigrovsky district the Shchigrovsky cast-iron, foundry and mechanical plant was created. The plant was engaged in release and repair of agricultural machinery.

In 1892, due to connection with the forthcoming construction of the railroad Kursk-Voronezh, the plant is moved to the Shchigra city.

Kursk magnetic anomaly, first drilling rigs

The plant history in the XX-th century is closely connected with exploration of Kursk magnetic anomaly fields. In the early twenties large-scale surveying works are carried out, for which reliable drilling equipment is required. In 1927 in shops of the Shchigrovsky mechanical plant the first KMA-300 drilling rigs are manufactured. In 1935 release of machines for shock drilling of the UA-75 type, and also pump winches begins.

Formation of the factory

After the Great Patriotic War a new period in the history of the factory begins. The plant quickly increases the rates of production. In 1953 full reconstruction of plant is carried out, advanced technologies in machining, forge and foundry production take root. In 1963 the output exceeded pre-war level by 39 times.

Towards the technical progress

An important stage of development of the enterprise is the creation in 1976 of the production association "Geomash." The Shchigrovsky plant of the prospecting equipment and special design office with pilot production are a part of the association. The main objective standing before "Geomash" - modernization of products. There are high-quality shifts in increase of the technological level of production.
In 1981 the UGB-50M drilling rig is replaced with the high-performance UGB-1VS drilling rig.
UGB-1VS will become the most popular drilling rig for carrying out of engineering researches, geological exploration and seismic exploration in the territory of the USSR and in near abroad Countries.

In 1992 the enterprise is incorporated and renamed into OJSC Geomash. Among the plants most known products are PBU-2, USh-2T4, AZA-3, LBU-50, and also the boring tools.

BMG — 004

Man portable drill rig

Modification provides:

- Engineering-geological researches
- Seismic exploration.

The BMG — 004 is intended for drilling in I-IV drilling capacity. Maximum depth of drilling with augers of 62mm diameter is 15 meter and the max depth of drilling with augers of 108 mm diameter is 10 meters. In addition drilling the BMG construction allows to perform core drilling with 93 mm drill pipes up to 10 meters drilling capacity soils up to VII.

The ambient class of the set allows it to be exploited from -40 °C up to +40 °C – by the Russian standard GOST 15150-69.

The stand is mounted on two wheels and is equipped with handles for easy transportation on uneven grounds by efforts of two men. When the stand is shifted into working position the wheels do not interfere with drilling.

The stand has an ability of anchorage.

The frame of the carriage allows quick dismantling and malting of the rig.

The feed stroke of the rig enables works with 1 meter augers.

The handle of the feed reductor is able to be fixated.

Technical characteristics

BMG-004	
Feed stroke, mm	1200
Drive power, kWt	4,5
Torque, H*m	128/205/245
Spindle rotation frequency, r/min	220/137/115
The stand:	
Load capacity, kg	300
Feed	Chained hand powered
Perceived toque, kgF*m	No less than 30
mass, kg	No more than 44
Overall dimensions of the rig, mm:	
- Transport position (height/ width/ length)	1730/960/1060
- Operation position (height/ width/ length)	1060/960/1730
Total mass of the rig, kg	76
Conditional drilling depth, m:	
- with augers d=108/62 mm	10/15
- Dry core drilling d=93 mm	10

BMG — 001

Man portable drill rig

Modification provides:

- Engineering-geological researches
- Seismic exploration.

BMG "Scarabey", Is designed to mechanize drilling-and-blasting works in conditions where application of all other machines is impossible due to lack of glades, boning boards, access roads.
The engine mounted on the two-wheeled manual cart with arms for laying of a boring reducer, a flexible shaft and stock of tools allow to perform by forces of two workers all range of works on transportation and drilling.

Technical features

The BMG is used where it is required to carry out seismoprospecting works with the categorical requirement of ecology preservation of the researched area.
Advantuges of the BMG.
- work and transportation is made by a crew of 2 people;
- lack of a hydraulic system simplifies desing;
- simple mechanical scheme allows to diagnose and debug in the minimum terms;
- existence of own wheels and small weight ensures mobility, at small distances from a venuce of work to base camp.

Application experience

Drilling rigs are used when drilling geophysical wells up to 8 meters in depth. The object of drilling operations was in Western Siberia. Category of breeds on drilling capacity of III. As the boring tools augers with a threaded connection with a diameter of 62 mm with a chisel with a diameter of 70 mm were used.
In general only 15-20 minutes are spent for construction of one well, 20-25 well are constructed per shift.

Technical characteristics

Rotation frequency, from ... to, rpm	230-360
Clutch coupling	Centrifugal
Clutch response frequency r/min	2100-2200
Transmission	Flexible shaft length not less than 2500 mm
Feed mechanism	Manual
Mass of the drilling rig, fully fueled, without tools, no more than, kg	80
Drilling diameter, max., mm	110

BBU 000 «Openok»
Compact block drill rig

Modifications provide:

- Engineering-geological researches
- Prospecting works
- Seismic exploration
- Water supply
- Drilling of technical wells

Technical characteristics

Feed stroke, m	1.4
Longitudinal stroke of the stand, mm	900*
Up and down feed force, max., kgf	1500/1500
Feed speed, m/s	0.4
Length of the boring pipe, mm:	
- at rotary drilling	1000
- at DTH drilling	750
Spindle rotation frequency, rpm	0-700
Torque, max., kgf*m	150
Spindle drift diameter, mm	52
Well vertical tilt angle, deg	0-45/ 90
Winch load capacity, kgf	400, 1000
Engine capacity:	
petrol/diesel/electric, max., kW	17.6/17.7/15.0
Overall dimensions, mm:	
- operating position (height /width/length)	2000/1550/1700-2590**
Height with the winch/mast, mm	2800/4100
Mass of the rig (without the mast and winch), kg:	
- with the petrol/diesel/electric motor	625-695**
Max block mass, kg	120
Diameter of the well, max., mm	230
Conditional drilling depth, m:	
- augers, diameter 230 mm	10-12/20-25
- with washing, diameter 59 mm	to 100
- with airflush, diameter 112 mm	50
- with DTH tools, diameter 150 mm	50

* - except for the BBU 000 series 20 rigs
** - depending on engine type

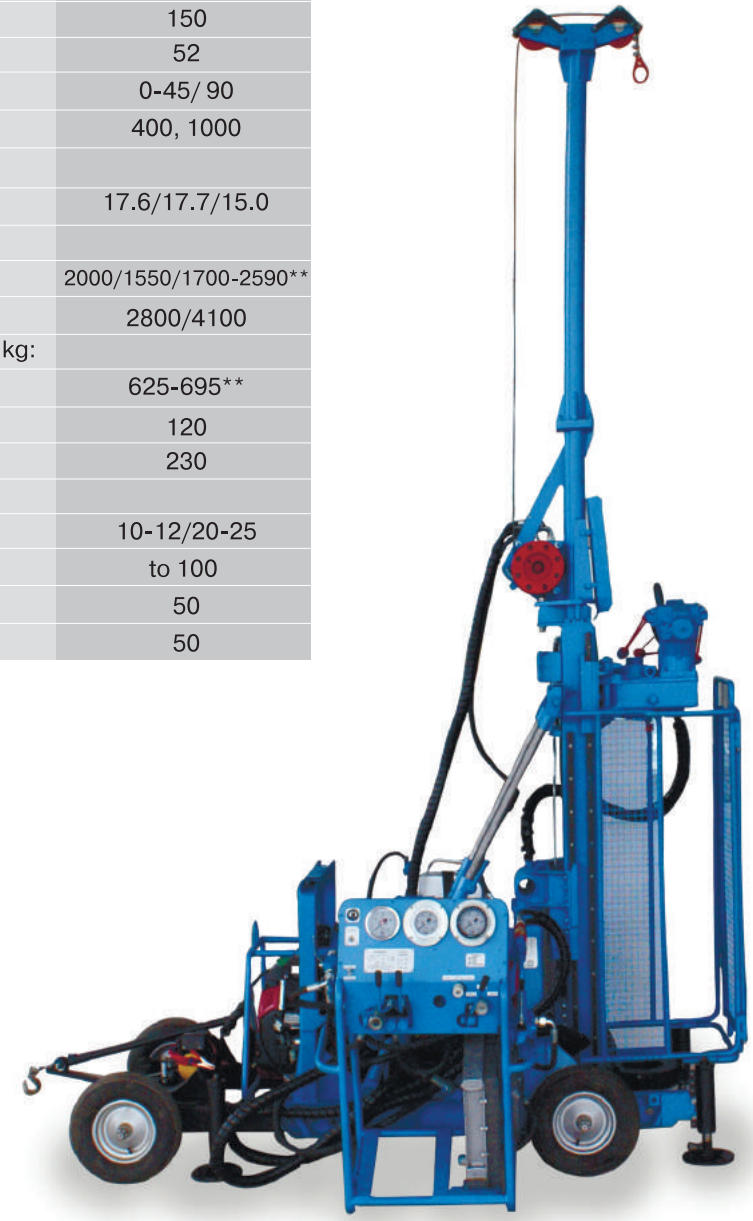

Technical features

- **Compact dimensions and light weight of the rig, and its block design provide:**
  - possibility of work in constrained conditions, including in facilities with ceiling overlappings from two meters high,
  - delivery of the rig to remote districts by means of small aircraft, light caterpillar and wheel vehicles, and if necessary manually by boring crew forces,
  - possibility of rig installation on the wheel cart with a towing winch for movement in assembled mode within operation area and loading on vehicles,
  - possibility of rig blocks placement on a working platform within RVD length,
  - possibility of installation on vehicles with a load capacity from 900 kg by means of the customer*.
- **Design features of the metalwork provide:**
  - possibility of inclined and horizontal drilling,
  - possibility of loading and transportation of the assebled rig, without blocks dismantling.
- **Mobile rotator with a through passage spindle with drive from the adjustable hydromotor** provides both high-speed diamond drilling, and drilling with augers without the need for mechanical switching of frequency rotation ranges.
- **Carriage design of the mobile rotator** provides side turn of the rotator for release of the well mouth during the work with the winch.
- **Wide number of attachments and accessories delivered on demand,** provides main operations with various types of boring tools and mechanization of auxiliary operations.
- **Select the type of winch selection:** delivery with the cargo winch, or with the winch with free dumping function is possible.
- **Wide range of drive motors** makes it possible to select the type of drive most suitable for working conditions.

* - on condition of acquisition of special assembly sets

Block drive

Various options of the rig drive: petrol, diesel, electric. Possibility of quick replacement of one engine to another.

Stand with the feed mechanism

Stand with the feeder allows the BBU 000 to realize oblique drilling at the expense of the telescopic struts

increasing its stability in oblique situation under the influence of thrust load and the moment of rotation.

Control panel

Possibilities of increase in length of sleeves of high pressure (optionally) for convenient arrangement of the panel.

Base

Basis is equipped with technological openings for anchoring of the drilling rig.

GEOMASH

Implemented drilling methods	Diameter max., mm
Auger	230
Rotary core "dry"	151
Rotary core with washing/airflush	151
Rotary noncore with washing	190.5
Shock and rotary core with airflush	160
Shock and rotary noncore with airflush	150
Shock punchdown	108
Free fall boring	127

Drive options	Modifications	
	standard	simplified *
petrol Honda engine	+	+
petrol Vanguard engine	+	+
electric engine	+	+
diesel Lombardini engine	+	+

* - no inclined drilling and quick disconnect connections (BRS are established in hydraulic system sleeves), and also possibility of accelerated dismantle.

Additional equipment

- Mast with a hydrodriving winch for auxiliary operations with boring and upsetting pipes
- Various length of mast extenders
- Self-towage and loading set of the rig
- Set for drilling with washing including a motor-pump or the pump NB1-25/16
- Grease-retainer for drilling with washing/airflush
- Set of Dynamic Sounding (KDZ)
- Mobile compressor station
- Hydrohammer
- Hydraulic tube holder

KDZ -001 (Dynamic sounding instrument set)

KDZ-001 is intended for field tests of soil in accordance with GOST 19912-2001 "Soil. Methods of field tests by static and dynamic sounding" in soil with conditional dynamic resistance from 0.7 to 17.5 MPa.

Application scope of KDZ-001 includes determination of conditional dynamic resistance of sand and clay soil (except soil containing macrofragmental inclusions more than 40% of the weight).

Technical characteristics of KDZ-001

Impact device	Hydrodriving, adjustable
Work pressure in the hydraulic system, MPa	7
Consumption of hydraulic liquid, no more than, l/min	2.5
Conditional dynamic resistance of soil, MPa	over 0.7 to 17.5 inclusively
Mass of the device, kg	230
Device dimensions	
- height, mm	3000
- width, mm	640
Mass of the hammer, kg	60
Height of hammer falling, mm	800
Frequency of beats per minute	15...30
Diameter of sounding bars, mm	42
Length of sounding bars, mm	1000
Vertex angle of the probe cone, deg	60
Diameter of the base of the cone tip, mm	74

Hydraulic Hammer

The hydraulic hammer is designed for immersion driven core tube with diameter up to 121 mm when sampling at any soil for engineering research in construction.

Mounted on a standard movable rotary head carriage through a special adapter and connects to the hydro circuit rotator drive.

The swap of the rotary head on the hammer by two workers takes no more than 5 minutes.

The guaranteed depth of sampling is 10 -15 meters in categories I-IV of drilling capacity. The length of the rail is determined by the length of the receiving part of the driving submersible and the course of the carriage feed. It is possible to deepen the well and clean the face with standard down hole cups with a diameter up to 127 mm.

Drill pipes TBSU-43, TBSU-63.5, as well as the rods of the dynamic sensing probe with a diameter of 42 mm can be used as drill columns.

BBU 001-001

Small-sized multipurpose self-propelled drill rig BBU 001-001

Modifications provide:

- Engineering-geological researches
- Prospecting works
- Seismic exploration
- Water supply
- Drilling of technical wells

Types of Engine:

- BBU 001-01-001 with gasoline engine
- BBU 001-02-001 with diesel engine
- BBU 001-03-001 with electric engine

Technical characteristics

Feed stroke, mm	1400
Spindel rotation frequency, rpm	0-650
Torque, max., kgF*m	150
Feed speed at dissent and assent operations , m/s	0,7/0,23
Feed force, kgF:	
- up	1500
- down	1500
Length of drill pipe, mm:	
- at rotary drilling	1000
- at percussion drilling with DTH hammer	750
Tilt angle of the rotary head to the vertical at longitudinal plane, deg.:	0-90
Drive power, max., kWt:	
- gasoline engine	17,6/25,7
- diesel engine	17,1
- electric engine	15,0
Winch weight capacity, kgF	400
Mass of the mast and the winch combined, kg	80
Overall dimensions of the rig at transport position (without the winch), height/ width/ length, mm:	1895/790/2680
Mass of the drill rig with unfueled hydraulic system , kg:	1350
Diameter of drilling, max., mm	230
Conditional drilling depth,, m:	
- with augers diameter 135 mm	25
- with DTH hammer diameter up to 150 mm	50
- with air flush diameter 112 mm	50

Technical features

• The transport base of the rig is the mobile caterpillar track developed by the construction bureau of the «Geomash» group.

• Use of positioning of mechanical supports or hydraulic jacks. The front jacks are mounted on the swinging arms, the back jacks are mounted on the bracket arms, which are hard-wired to the mobile base.

• Nosing of all aggregates and all elements of the hydraulic system and electrical apparatus are mounted on the frame of the mobile base. Access to the aggregates, hydraulic system and the electric apparatus is gained through the technological hatch and the swing panel.

• Use of the elector-hydraulic remote control of the mobile transport base.

• Use of hydro-cylinder for dumping.

• Combination of the hydraulic winch with the crown block and its' positioning at the top of the extension of the guide post.

• Including the drilling rigs composition support of the guide post, with placement of rotating tools barrier brackets and reinforced fixing elements of the centralizer and tubeholder.

• Use of bicuspid fence of the rotary instrument with electric protection mechanism – disabling of rotation when the doors are open.

• The control panel is positioned on the right side of the rig — as viewed in the direction of vehicle motion.

• The rig is equipped with a 30 litter-volume fuel-tank

• The rig is equipped with a control sets of the linear and sidelong careen of the mobile base and the mast.

• Mechanism of additional fixation of the mast at vertical drilling.



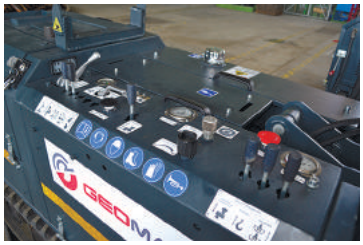


Implemented drilling methods	Diameter max., mm
Auger	230
Rotary core "dry"	151
Rotary core with washing/airflush	151
Rotary noncore with washing	190.5
Shock and rotary core with airflush	160
Shock and rotary noncore with airflush	150
Shock punchdown	108
Free fall boring	127

MBU-400

Drill rig with hydraulic drive of a mobile rotator

Modification provides:

- Engineering and geological surveys
- Geological prospecting
- Construction of water supply wells and geothermal wells
- Industrial wells
- While strengthening foundations and unstable soils.

Technical characteristics

Maximum rotation frequency, RPM	2600
Feed stroke, mm	2200
Feed force up/down, kgf	1800 or 3000*
Feed speed up and down during at drilling, m/s	0.1
Feed speed up and down at round trip, m/s	0.4
Torque, kgf.m	150 - 250*
Spindle rotation speed, RPM	40...700
Maximum operating table pass diameter, mm	255
Diameter of the boring pipes set on forks, mm	63.5
Angle of mast longitudinal inclination, degrees	-3...+45
Type of the boring pump	piston with a hydraulic actuator
Maximum pump capacity, l\min	150
Maximum working pressure of the pump, not less, bar	90
Mass of the drilling rig at fueled hydraulic system, no more, kg	2600
Rig drive	Kubota 3800
Drive power, kW	74
Caterpillar type	metall filled rubber
Width of a caterpillar cart, mm	300
Cart drive	from hydraulic system of the drilling rig
Maximum movement speed, km/h	2.8
Maximum pressure in the hydraulic system, MPa	25
Overall dimensions in transport position, mm	
- length/width/height	3600/1570/2220
The mass of the towed trailer, kg	up to 1000

* - depending on modification, it is specified in the order

Implemented drilling methods	Diameter max., mm
Auger	230
Rotary core "dry"	151
Rotary core with washing/airflush	151
Rotary noncore with washing	190.5
Shock and rotary core with airflush	160
Shock and rotary noncore with airflush	150
Shock punchdown	108
Free fall boring	127

Basic set

- Drive unit
- Tank for hydraulic system fluid
- Hydraulic fluid cooling and purification system
- Guide column (mast) with hydrodrive feeder of a rotator head with a crownblock, mounted on support of the mechanism of longitudinal relocation ("dumping")
- Rotary head with a hydraulic actuator
- Hydrodriving support jacks, placed on the drilling rig frame
- Hydrodriving cargo winch
- Control panel
- Piston pumps with hydraulic drive, with the discharge line
- Operationg table for underlayer forks, combined with a centralizer for boring columns mounted in the lower part
- Storage for boring and core pipes
- Illuminating equipment
- Safety means

Additional equipment**

- Compressor
- Dynamic sounding unit
- Hydraulic tube holder
- Hydrohammer or hydraulic perforator

** - on demand of the customer

MBU

Drill rig with hydraulic drive of a mobile rotator

Modifications provide:

- Engineering-geological researches
- Prospecting works
- Seismic exploration
- Water supply
- Drilling of technical wells

Technical characteristics

Feed stroke, m	1400/2200
Feed force up/down, max., kgf	3000*/1500
Spindle rotation frequency, rpm	0-700
Feed speed, m/s	0.4
Boring pipe length (auger), mm:	
- at rotary drilling	1700/1500
- at (DTH) pneumoshock drilling	1500
Torque, max., kgm	150
Spindle drift diameter, mm	52
Winch load capacity, kgf	1000 **
Power of the petrol/diesel drive, kW	25.7/17.7
Diameter of the well, max., mm	230
Conditional drilling depth, m:	
- augers, diameter 230 mm	10-12
- augers, diameter 135 mm	25
- with washing, diameter 59 mm	to 100
- with airflush, diameter 112 mm	50
- with pneumatic impact tools (DTH), diameter 150 mm	50
- free fall method, diameter 127 mm	30

*-depending on mass of the drilling rig

** - free-fall winch

Technical features

- **Mobile rotator with a through passage spindle with drive from the adjustable hydromotor** provides both high-speed diamond drilling, and drilling with augers without the need for mechanical switching of rotation frequency ranges.
- **Carriage design of the mobile rotator** provides rotators side turn for release of the mouth of a well during the work with the winch.
- **Possibility of crown block installation on sliding extenders** provides reduction of transport dimensions of the drilling rig.
- **Wide number of adaptations and accessories delivered on demand,** provides main operations with various types of boring tools and mechanization of auxiliary operations.
- **Choice of winch type:** available with cargo winch or winch which has the function of free fall.
- **Wide range of drive engines** gives the chance to choose the drive type, that is most suitable for working conditions.
- **Installation on vehicles with increased passability** allows to use the rig in remote areas in cross-country conditions.

Control panel

Management of all working bodies of the rig is concentrated on the control panel that is mounted on the left side, in direction of travel, of the transport base. Thus effective view of the wellhead zone and workplace of the assistant driller is provided.

Hydraulic jacks

Allows to comply well verticality at exhibiting of the rig. Unloads the transport base.

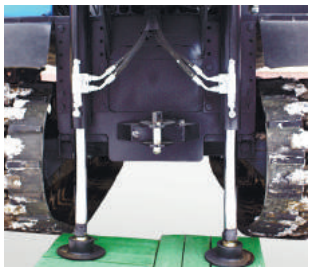

Hooded ICE

For work in extremely low temperature conditions, the engine is equipped with the deck hood.

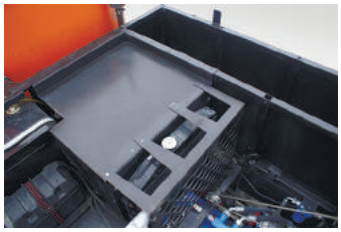

Winch

Compact winch of the MBU drilling rig provides free fall drilling, well bailing, mechanizes process of descent/ rise of an upsetting column and boring pipes, and also is used at auxiliary operations (facilitates and saves forces and operating time). Winch load capacity - 1000 kgfs.

GEOMASH

Implemented drilling methods	Diameter max., mm
Auger	230
Rotary core "dry"	151
Rotary core with washing/airflush	151
Rotary noncore with washing	190.5
Shock and rotary core with airflush	160
Shock and rotary noncore with airflush	150
Shock punchdown	108
Free fall boring	127

Transport base options	Drive options		
	Deck disele engine	Deck gasoline engine	Drive from the vechile engine
GAZ-3897 «Eger»	+	+	+
GAZ-330273 «Gazel»	+	+	
BV-5 «Hagglunds»	+	+	
GTM-0,8			+
UAZ	+	+	+
Catepiler transport base	+	+	
Auto trailer MZCA	+	+	

Additional equipment

- Hydraulically driven winch with free fall, capacity - 1000 kg*
- Mobile compressor station
- Pump station NB1-25/16
- Plunger or centrifugal pump
- Motor pump
- Core expression device (UVK)
- Dynamic sounding set (KDZ)
- Mechanical rod extractor
- Hydrohammer for corer immersion
- Crownblock*
- Work Desk for four plain plugs, auger centralizer
- Hydraulic tube holder
- Grease-retainer
- Frame elevator for pipes
- Adapter for augers
- Auxiliary fuel tank
- GPS

*- For MBU on the basis of GAZ-3897 "Eger" and GTM-0,8 is included into the basic set

KDZ -001 (Dynamic sounding instrument set)

KDZ-001 is intended for field tests of soil in accordance with GOST 19912-2001 "Soil. Methods of field tests by static and dynamic sounding" in soil with conditional dynamic resistance from 0.7 to 17.5 MPa.

Application scope of KDZ-001 is determination of conditional dynamic resistance of sand and clay soil (except soil containing macrofragmental inclusions more than 40% on weight).

Technical characteristics of KDZ-001

Impact device	Hydrodriving, adjustable
Work pressure in the hydraulic system, MPa	7
Consumption of hydraulic liquid, no more than, l/min	2.5
Conditional dynamic resistance of soil, MPa	over 0.7 to 17.5 inclusively
Mass of the device, kg	230
Device dimensions	
- height, mm	3000
- width, mm	640
Mass of the hammer, kg	60
Height of hammer falling, mm	800
Frequency of beats per minute	15...30
Diameter of sounding bars, mm	42
Length of sounding bars, mm	1000
Vertex angle of the probe cone, deg	60
Diameter of the base of the cone tip, mm	74

UGB

Drill rig with hydraulic drive of a mobile rotator

Modifications provide:

- Engineering researches
- Hydrogeology, drilling on water
- Geological exploration
- Seismic exploration
- Construction of piles and other special technical operations

Technical characteristics

Feed stroke, m	2.2/ 3.4/ 5.2
Length of the drill pipe, max., m	4.7
Feed force, kgf:	
- up	3000/6000/8000*
- down	1500/3000/8000*
Spindle rotation frequency, rpm	
- I range	10-320
- II range	10-710
Torque, max., kgf*m	350/ 650
Winch load capacity, kgf	1000/ 3000*
Well angle, to the horizon, deg	from 50 to 90
- augers, diameter 135/350 mm	40/12
- augers, diameter 350 mm	12
- with washing, diameter 93 mm	300**
- with airflush, diameter 151 mm	80**
- with pneumatic impact tools, diameter 250 mm	30**
- free fall, diameter 146 mm	35-40
- vibration «dry»,127 mm	30

* - depending on modification
** - depending on applied pumping and compressor equipment and boring pipes

Technical features

- All working bodies and aggregates have a **hydraulic drive.**
- **Smoothly adjustable,** continuously adjustable frequency, force and speed of feed.
- **Rotator displacement** from the axis of the well by hydraulic cylinders.
- Drilling possibility of **inclined wells.**
- **Due to the spindle rotation frequency** more than 700 RPM, there is a possibility of drilling by diamond rock cutting tools in breeds of the XII category on drilling capacity.
- **Installation of equipment for vibrational drilling with a frequency of vibration of 150 Hz is possible,** that provides high penetration rate in comparison with other methods of drilling, and also sampling of soil of undisturbed structure.
- **For increase of drilling stability** the mast is equipped with the mechanism of its longitudinal relocation against the stop in soil.
- **High operation speed** in case of hoisting operations with boring and upsetting pipes.
- **The winch provides** free fall drilling, well bailing, mechanizes process of descent / rise of an upsetting column and boring pipes, and also applied in case of auxiliary operations.
- **Additional power source set:** electric and welding generator.
- **Wide choice of transport bases:**
  - GAZ-33081 "Sadko", URAL-4320, KAMAZ, ZIL-131 (AMUR), caterpillar chassis (GAZ-34039; MTLBu; T-147; MTLB), sledge,
  - possible to use other means of transport,
  - performance of the rig for operation from watercraft.
- **Counter of engine hours, signaling device of hazardous voltage and rerise.**
- **Equipment for static and dynamic sounding of soil.**
- **High maintainability.**






Transport base options*	Drive options	
	deck diesel engine	drive from the vehicle engine
GAZ-33081 "Sadko"	+	+
URAL-4320	+	+
KAMAZ	+	+
ZIL-131 (AMUR)	+	-
Caterpillar chassis (GAZ-34039; MTLBu; T-147; MTLB)	-	+
Sledge	+	-

* - at request of the customer installation can be mounted on the provided vehicle or conversed transport basis.

GEOMASH

Implemented drilling methods	Diameter max., mm
Auger	330
Auger - with constant internal diameter augers SH	270
Auger - kelly	800
Rotary Head with wash	244.5
Rotary Head "dry" by hard-alloy crowns	171
Rotary Head with wash by hard-alloy crowns	171
Rotary Head with wash by diamond crowns	112
Shock Rotary Head with airflush	250
Shock Rotary Head with airflush	160
Vibrational	127
Free-fall	168
Shock and rotary with use of a hydraulic perforator with installation of TITAN type piles	52

Basic set

- Mast combined with the feeder mechanism
- Rotary Head
- Winch

Additional equipment

- Pipe Holder
- Hydrodrive block of tubeholders with screw breakers
- Desk for auger forks
- Upsetting hydrodrive desk SOG-000
- Welding generator GSV-500
- Electric generator

Boring pumps and compressors

Pump parameters	NB-160/6.3	Speck 62/100V (Germany)	NB-50	Speck 50/250 (Germany)
Feed, l/min	8-160	160	700	720
Pressure max, MPa	6.3	10	6.3	0.83
Power, kW	11	32.7	50	17
Drive	from the deck engine; from the chassis	from the deck engine; from the chassis	from the chassis	from the chassis
Weight, kg	420	118	1100	54

Compressor parameters	KV-10/10; KV-12/12P	AK-9/10	NK-160
Productivity, m^3/min	10;12	9	7,0
Pressure max, MPa	1.0;1.2	1	1,5
Power, kW	90;132	75	45
Drive	own ICE	from the chassis	from the chassis
Weight, kg	1600; 2300	400	174

KDZ -001 (Dynamic sounding instrument set)*

KDZ-001 is intended for field tests of soil in accordance with GOST 19912-2001 "Soil. Methods of field tests by static and dynamic sounding" in soil with conditional dynamic resistance from 0.7 to 17.5 MPa.

* - Technical characteristics see p. 6

Device of static sounding SZGU-000

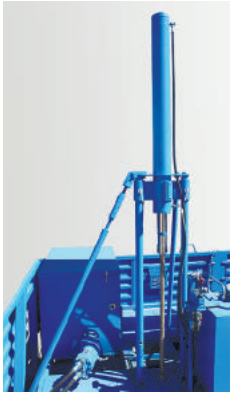

SZGU-000 is intended for field surveys of soil by method of static sounding according to GOST 19912-2001 with use of instrument clusters "TEST K2", "TEST K4", "PIKA-17", "PIKA-19". Supplied as an option as a part of UGB rig on the KAMAZ-43114-15, KAMAZ-43118-46, KAMAZ-5350-42 chassis, MTLBu. Thanks to the summary mass of drilling equipment it is possible to carry out static sounding without ankering and mast rise, thus for centration of a sounding column and its protection against bend between the deck of the drilling rig and surface of the earth the special centralizer is a part of the device. For protection of instruments and the operator of static sounding against precipitates and influence of sunshine the additional set is provided by a shelter.
The device is supplied with its own control panel.

Diameter/Length of the sounding rod, mm	36/1000
Push force/ extraction, kgf	to 10000/to 8000
Speed of probe push force, m/min	0.9 - 1.5

Pipe Holder

It is intended for centration of the tool when drilling, holding of boring and upsetting pipes at building and hoisting operations, breaking-out of the tightened threaded connections. Diameter of the clamped pipes 55 - 146 mm.

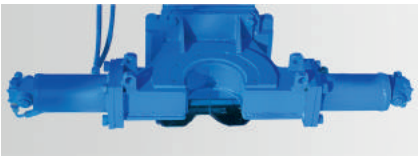

Upsetting hydrodrive desk (SOG-000)

It is intended for upsetting, holding and extraction of upsetting columns in case of construction, repair and elimination of wells up to 200 meters in depth. SOG-000 ensures safe functioning during descent and extraction of upsetting pipes from the well, that allows to drill with advancing/simultaneous sinking of a trunk in difficult geological conditions.

Flow diameter of capture of the hydraulic and mechanism of maple capture, max., mm	340
Diameter of upsetting pipes, mm	127, 146, 168, 219, 245, 273, 299
Feed stroke of hydraulic capture, mm	400
Towing capacity (up) provided by hydraulic cylinders, kgf:	
nominal/maximum	12000/18000
Push down force, provided by hydraulic cylinders, kgf	6000

PBU-2

Drill rig with mechanical drive of a mobile rotator

Modifications provide:

- Engineering research
- Seismic exploration
- Drilling of wells of different function for construction
- Hydrogeology, drilling of wells on water
- Geological exploration

Technical characteristics

Feed stroke, m	1.8; 3.5*
Feed force, kgf:	
- up	3500 - 10000*
- down	3500 - 10000*
Spindle rotation frequency, rpm	25 - 430
Torque, kgf*m	500
Winch load capacity, kgf	2600
Conditional drilling depth, m:	
- augers	60
- auger bores	25
- free fall method	40
- with washing	100 -120
- with airflush	100

* - depending on modification

Technical features

• **Mobile rotator with mechanical drive** in combination with a powerful hydraulic feeder allows to create considerable axial load of the rock cutting tool from the first meters of drilling.

• **Design of the rotator** provides possibility of its diversion from well axis for performance of hoisting operations, installation of upsetting columns and realization of technology of free fall drilling with use of the boring winch.

• **PBU-2 is mounted on its own frame with the drive from the independent diesel engine,** that gives the chance of its installation on mobile transport means which don't have own engine or on which power take is impossible.

• **Use of the deck power unit** allows to lower the depreciation expenses involved with operation and service of the engine of the vehicle and also reduces fuel consumption.
At request of the customer modification of the drilling rig with the drive from the engine of transport base is issued.

• **Wide choice of transport bases:**
- ZIL-131, URALS-4320, KAMAZ (euro-4), MAZ, caterpillar chassis (MTLBu; T-147; MTLB; TT-4M; TCH 4; TLT-100A), sledge,
- use of other vehicles means is possible,
- execution of the drilling rig work with watercrafts.

• Works in various climatic conditions and temperatures from **-40 C^0 to +40 C^0.**

• **Counter of engine hours, signaling device of dangerous tension, rerise signaling device.**

• **Static and dynamic soil sounding.**






Transport base options*	Drive options	
	deck diesel engine	drive from the vehicle engine
ZIL-131	+	-
URAL-4320	+	+
KAMAZ	+	+
MAZ	+	-
Mercedes	-	+
Renault	+	-
Sled basis	+	-

* - at request of the customer installation can be mounted on the provided vehicle or conversed transport basis.

GEOMASH

Implemented drilling methods	Diameter max., mm
Auger	108
Auger - SHR augers with a constant internal diameter	270
Auger - Kelly	850
Rotary noncore with washing	250
Rotary core "dry" by hard-alloy crowns	171
Rotary core with washing by hard-alloy crowns	171
Rotary core with airflush by hard-alloy crowns	171
Shock and rotary noncore with airflush	250
Shock and rotary core with airflush	160
Free-fall boring	168

Basic set

- Mast combined with the feed mechanism
- Rotator
- Winch
- Pump and / or compressor equipment *
- Balancer*
- Deck diesel engine *
- Dynamic sounding device (KDZ) *

* depending on modification

Additional equipment

- Boring grease-retainer
- Power supply source with the welding generator (it is mounted on the car chassis)
- Impulse shock absorber
- Boring table
- Drill pipe elevator
- Prestarting heater 14TS-10 "Teplostar" (for PBU-2 with the diesel engine D242-819 with an electric starter on 24V)
- Set of adaptations for (DTH) pneumoshock drilling

Boring pumps, compressors

Pump parameters	NB-160/6.3	NB-50
Feed, l/min	160/8	715
Pressure max, MPa	4.5/6.3	6.3
Type	plunger	piston
Power, kW	11	50
Drive	from the chassis/deck engine	from the chassis
Mass, kg	400-480	1180

Compressor parameters	2 VU	KV-10/10 GTT	PK-5.25	AK-9/10
Capacity, m^3/min	0.6	10	5.25	9
Pressure max, MPa	1.6	1	0.7	1
Drive	from the deck engine	from the chassis	from the deck engine	from the chassis
Mass, kg	110	400	320	400

KDZ -001 (Dynamic sounding instrument set)

KDZ-001 is intended for field tests of soil in accordance with GOST 19912-2001 "Soil. Methods of field tests by static and dynamic sounding" in soil with conditional dynamic resistance from 0.7 to 17.5 MPa.

Application scope of KDZ-001 includes determination of conditional dynamic resistance of sand and clay soil (except soil containing macrofragmental inclusions more than 40% on weight).

Technical characteristics of KDZ-001

Impact device	Hydrodriving, adjustable
Work pressure in the hydraulic system, MPa	7
Consumption of hydraulic liquid, no more than, l/min	2.5
Conditional dynamic resistance of soil, MPa	over 0.7 to 17.5 inclusively
Mass of the device, kg	230
Device dimensions	
- height, mm	3000
- width, mm	640
Mass of the hammer, kg	60
Height of hammer falling, mm	800
Frequency of beats per minute	15...30
Diameter of sounding bars, mm	42
Length of sounding bars, mm	1000
Vertex angle of the probe cone, deg	60
Diameter of the base of the cone tip, mm	74

Boring table

The boring table is intended for fixing of a boring column in a well in the course of building and column dismantling. It is used:
- as the conductor for augers Ø 135 - 230 mm and short borer
- for fixing at screwing and unscrewing of TBSU boring pipes.

LBU-50
Multipurpose drill rig

Modifications provide:

- Drilling of wells of different function in construction works
- Drilling of technical wells
- Hydrogeological wells
- Water supply
- Engineering researches

Technical characteristics

Technical characteristics	mobile rotator drive	
	mechanical	hydraulic
Feed stroke, m	3.25 - 3.9*	3.9
Feed force, kgf:		
- up	12000	12000
- down	6000	6000
Spindle rotation frequency, rpm	14-101; 14-220*	0-200
Torque, max., kgm	2000	
Winch load capacity, kgf	2500	3000
Conditional drilling depth, m:		
- augers	60	
- auger bores	25	
- auger bore sliding along the rods	16	
- with washing	200	
- with airflush	100**	
Drilling diameter, max. mm:		
- augers	500	
- auger bores	1050	
- with washing (end)	190.5	
- with airflush (end)	190.5	
- submersible (DTH) pneumatic impact tools	550	
- free fall drilling	168	

* - depending on modification
** - it is restricted to compressor parameters

Technical features LBU-50 (with mechanical drive of a mobile rotator)

• **Two options of the mobile rotator drive**: mechanic or hydraulic.

• **Mechanical drive** of the mobile rotator – time proved decision for different climatic conditions.

• **Mobile rotator** with a mechanical drive in combination with a powerful hydralogical feeder allows to create considerable thrust load on the rock cutting tool from the first meters of drilling.

• **Design of the rotator** LBU-50 enables its retraction away from the axis of the well to perform tripping operations, installation of casing and implementation of the technology of free fall drilling with use of a drilling winch with a lifting capacity of 2500 and 3000 kg.

• **Course of carriage** — 3900 mm makes it possible to use elements of the bottom hole assembly and drill pipes with a standard length of 3200 mm - 3500 mm.

• **Range of revolutions** 14-220 rpm allows the use of various drilling tools, including carbide bits, blade and roller cone bits.

• **Hydraulic drive** of the boring pump or compressors allows to change their productivity smoothly.

• **Equipment set** with a powerful pump or compressor unit combined with high torque provides high performance drilling operations in construction of wells for various purposes.

• Possibility of connection **of additional hydraulic equipment.**

Technical features of LBU-50-30 (with hydraulic drive of a mobile rotator)

• **The unit is equipped with a hydraulic rotator**, at the same time saving all advantages of LBU-50, provides a row of advantages in comparison with other modifications:

- reduced mass of a hinge plate and more favorable weight distribution on axes of transport basis allows to organize cargo platforms for transportation of the boring tools.

- smooth regulation of spindle rotation speed of two high-speed rotators provides torsional moment in the range from 3500 to 20000 Nm.

- flexible and universal control the feeder with opportunity of accelerated (to 5 times) relocation of a rotator.

• **Winch with a load capacity of 3000 kgf** with function of free dumping, allows to realize effective free fall drilling, and also well upsetting.

• **High reliability** due to lack of the difficult mechanical drive design.

• **Simplicity in service** and increased maintainability.

GEOMASH

Transport base options*	Drive options	
	deck diesel engine	drive from the vehicle engine
ZIL-131	+	-
URAL-4320	+	-
KAMAZ	+	+
Tractor TT4	-	+

* - at request of the customer installation can be mounted on the provided vehicle or conversed transport basis.

Implemented drilling methods	Diameter max., mm
Auger	500
Auger — with constant internal diameter augers SH	470
Auger - Kelly	1050
Rotational noncore with wash	490
Rotary core "dry" with hard-alloy crowns	171
Rotary core with wash by hard-alloy crowns	171
Rotary core with airflush by hard-alloy crowns	171
Shock and rotary noncore with airflush	550
Shock and rotary core with ariflush	140
Shock and rotational noncore with washing technologies of a simultaneous upsetting	219
Free fall	168

Basic set

- Winch
- Front* / back leveling jack
- Platform
- Desktop

Additional equipment

- Pillar crane
- Tube block
- Dynamic sounding instrument set (KDZ)
- Boring pump NB-50 *
- Compressor PK-5.25
- Hydrojacks (additional)
- GSV-500 welding generator
- Clamping table (hydraulic)

* - depending on modification

Boring pumps, compressors

Pump parameters	NB-50
Feed, l/min	700
Pressure max, MPa	6.3
Type	piston
Power, kW	50
Drive	hydraulic
Weight, kg	1100

Compressor parameters	PK-5.25
Performance m^3/min	5.25
Pressure max, MPa	0.7
Drive	from the deck engine
Mass, kg	320

Clamping table

It is intended for works when drilling by augers via replaceable conductors; boring pipes - for their holding through gashes in locks in the axial and radial directions by forks; clamps of upsetting pipes in case of their building, standard pipe size -159-426 mm.

Parameters	
Largest flow diameter on the desktop in case of removed cams, mm	500
Largest weight of the retained load on the desktop, kg	12000

Welding generator GSV-500

Parameters	GSV-500
Conventional welding current, A	500
Nominal voltage, V	40
Welding current range, A	60-500
Nominal cycle welding rate, min	10

KDZ -001 (Dynamic sounding instrument set)

KDZ-001 is intended for field tests of soil in accordance with GOST 19912-2001 "Soil. Methods of field tests by static and dynamic sounding" in soil with conditional dynamic resistance from 0.7 to 17.5 MPa.

Application scope of KDZ-001 includes determination of conditional dynamic resistance of sand and clay soil (except soil containing macrofragmental inclusions more than 40% on weight).

Technical characteristics of KDZ-001

Impact device	Hydrodriving, adjustable
Work pressure in the hydraulic system, MPa	7
Consumption of hydraulic liquid, no more than, l/min	2.5
Conditional dynamic resistance of soil, MPa	over 0.7 to 17.5 inclusively
Mass of the device, kg	230
Device dimensions	
- height, mm	3000
- width, mm	640
Mass of the hammer, kg	60
Height of hammer falling, mm	800
Frequency of beats per minute	15...30
Diameter of sounding bars, mm	42
Length of sounding bars, mm	1000
Vertex angle of the probe cone, deg	60
Diameter of the base of the cone tip, mm	74

GEOMASH

UBV

Drill rig with hydraulic drive of a mobile rotator

Modifications provide:

- Drilling of hydrogeological and water supply wells
- Drilling of decontaminational and other technical wells
- Drilling of wells for underground leaching of ores

Technical characteristics

Power take, kW	235
Maximum torque, Nm (kgm)	8000 (800)
Feed force, kgf:	
- up/down	20000/6000
Boring head feed rate, m/s:	
- up/down	0.6/0.5
Feed sroke, mm	7000
Rotator spindle rotation frequency, rpm	0 - 330
Drill pipes supply manipulator	
- mechanism loading capacity (max), kg	250
Boring table:	
- maximum diameter of clamped pipes, mm	451
Winch:	
- load capacity on a straight rope, kg	10000
GS-16 generator:	
- power, kW	16
- tension, V	240/400
Conditional drilling depth, m:	
- boring pipes d=85 of mm	800
- boring pipes d=114 of mm	500
Fuel consumption on 1 running hour, ltr	32
Conditional drilling speed, m/h:	
- with washing	24
- with submersible (DTH) pneumatic impact tools	60

Technical features

- **All rig working bodies have a hydraulic drive**, thanks to what possibility of additional equipment of extra processing without entering considerable changes into the drilling rig design is reached, labor input of management in comparison with the drilling rigs with mechanical transmission is reduced.
- **Electro hydraulic control of the hydraulic system** provides precise setup and operating control of rotation frequency and torque value when drilling.
- **The mobile rotator with a hydraulic drive has a through passage spindle,** providing possibility of installation of a grease-retainer for drilling on the RC technology.
  Optionally a clamping hydroshell can be mounted on a boring pipes spindle rotator.
- **The design of the mobile rotator** provides side shift of the mobile rotator for release of the wellhead during work with the winch.
- **Installation on a standard set** is equipped with a main winch with a loading capacity of 10 tons for hoisting operations and landing of upsetting columns.
- **Workplace of the assistant driller** is organized on the P-shaped folding platform fixed at the drilling rig stern.
- **Option delivery of the auxiliary winch with a rotary arrow** for mechanization of boring pipes building and load/unload works is possible.
- **For realization of DTH drilling** in difficult geological conditions installation can be completed with a lubricator for submersible pneumoshock cars and equipment for work with liquid-gas mixture.
- **Wide number of adaptations and accessories,** delivered on demand, provide main operations with various types of boring tools and mechanization of auxiliary operations.






Implemented drilling methods	Diameter max., mm
Auger drilling	500
Rotary non core with water circulation	490
Shock and rotary non core with airflush	508
Shock and rotary non core with the reverse circulation (RC)	380

GEOMASH

Transport base options	Drive options
	with the drive from the vehicle engine
KAMAZ-6522 *	+

* - and other chassis

Basic set

- Main winch
- NB-50 boring pump
- KB20/25 compressor **
- Hydraulic key chain
- One-pipe loader for boring pipes with a diameter of 114 mm
- Power plant with possibility of welding works
- Boring grease-retainer
- Basic aligning device for work with nipping forks
- Floating adapter, compensating the rotator weight when discrediting boring pipes
- Pressure discharge manifold with connection spots for additional pump and compressor equipment
- Auxiliary winch with a cargo arrow

** - depending on modification

Additional equipment

- boring pipes handling unit ***
- boring and upsetting pipes tube holder ***
- boring pipes hydrocartridge***
- boring pump NB-80 (instead of the pump NB-50)
- hydraulic drillpipe breaker
- lubricator with an injection system to the discharge manifold
- onboard boring pipes rack
- gas-liquid mixture equipment (dispensing pump with a foaming system)

*** - installed at request of the customer, instead of the single pipe loader, support-centering device and auxiliary winches with a cargo arrow

Boring pumps, compressors

Pump parameters	NB-50	NB-80
Volume feed, m^3/hour	39.6	50.4
Pressure max, MPa	6.3	10.0
Type	piston	piston
Power, kW	50	80
Drive	hydraulic	hydraulic
Weight, kg	1100	1300

Parameters of the compressor equipment	Compressor station KV 20/25 (Chelyabinsk compressor plant)
Volume productivity, m^3 / min	20
Nominal pressure, MPa	2.5
Power consumption, kW	193
Drive	Deutz TCD 2013L 06 4V diesel engine
Engine power, kW	227
Mass of the compressor station, kg	3100

RC technology (UBV-320)

The UBV-320 drilling rig allows to realize the technology of reverse circulation (RC) to the depth of 300 m. The RC technology is actively applied thanks to the highest mechanical speed of drilling worldwide. In recent years the RC technology received active use on the Russian market. Reverse circulation found special application in exploratory drilling thanks to fast receiving of soil samples, thereby intensifying process of prospecting works.

Contents set

Included into the equipment set for reverse circulation hammer drilling are the following components:

1 - discharging retainer
2 - grease-retainer
3 - an adapter from a rotator spindle to a grease-retainer
4 - an adapter from a discharging retainer to a column of boring pipes
5 - adapter from a rotator spindle to a discharging retainer
6 - grease hose
7 - mud tube
8 - double boring pipes with a diameter of 140 mm
9 - adapter on a rolling drilling bit
10 - inter change adapter on a standard pneumatic impact tool, or a rolling drilling bit
11 - DTH RC Sub adapter from the boring tube on a pneumatic impact tool ring
12 - ring pneumatic impact tool of DTH RC with a chisel for reverse circulation
13 - standard pneumatic impact tool with a chisel for direct purge
14 and 15 - rolling drilling bit
16 - cyclonic type grease/dust collector

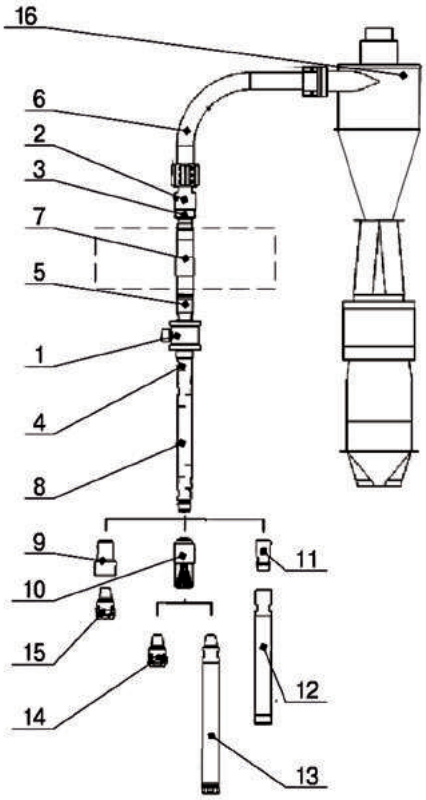

URB-40

Drill rig with a rotary table

Modifications provide:

- industrial water supply wells
- technical wells building, including for degasification, ventilation, water level lowering purposes
- wells for the inside laying communications into the underground mining
- hydrogeological exploration and underground leaching.

Technical characteristics:

Chassis	URAL 4320, semitruck, etc.
Power take off box	100% power take off
Power take off capacity, kW	130
Max. hook load, kN(tf)	392 (40)
Drilling depth, m	1000
Drilling pipes diameter, mm	73 / 89 /114
Recommended drilling diameter, mm (initial/final)	780 / 190,5
Winch drive	Drive from the main engine through PTO, cardan drive shaft, gearbox, transfer box
Gearbox	3-speed with electro-pneumatic operator
Gearbox speed ratio	-2,43 / -1,2 / -0,6
Drilling winch (drawwork)	2-reels, with central conical transfer box and planetary transfer box inside the drums. Strips up/down brake on the every two drums
Towing winch capacity on the 2-nd winding coil of the rope on the reel, kN (tf)	73,858 (7,5)
Rope reel winding speed with 1400 r/min main engine rotation depending of the gearbox speed ratio turn on, m/s	1,4 -5,7
Hoist-swivel - feed pipe - (4-string polyspast with 2x3 ratio) lifting speed depending of the gearbox speed ratio turn on, m/s	0,35 — 1,4
Hoist — up/down elevator - (6-string polyspast with 3x4 ration) lifting speed depending of the gearbox speed ratio turn on, m/s	0,23 — 0,95

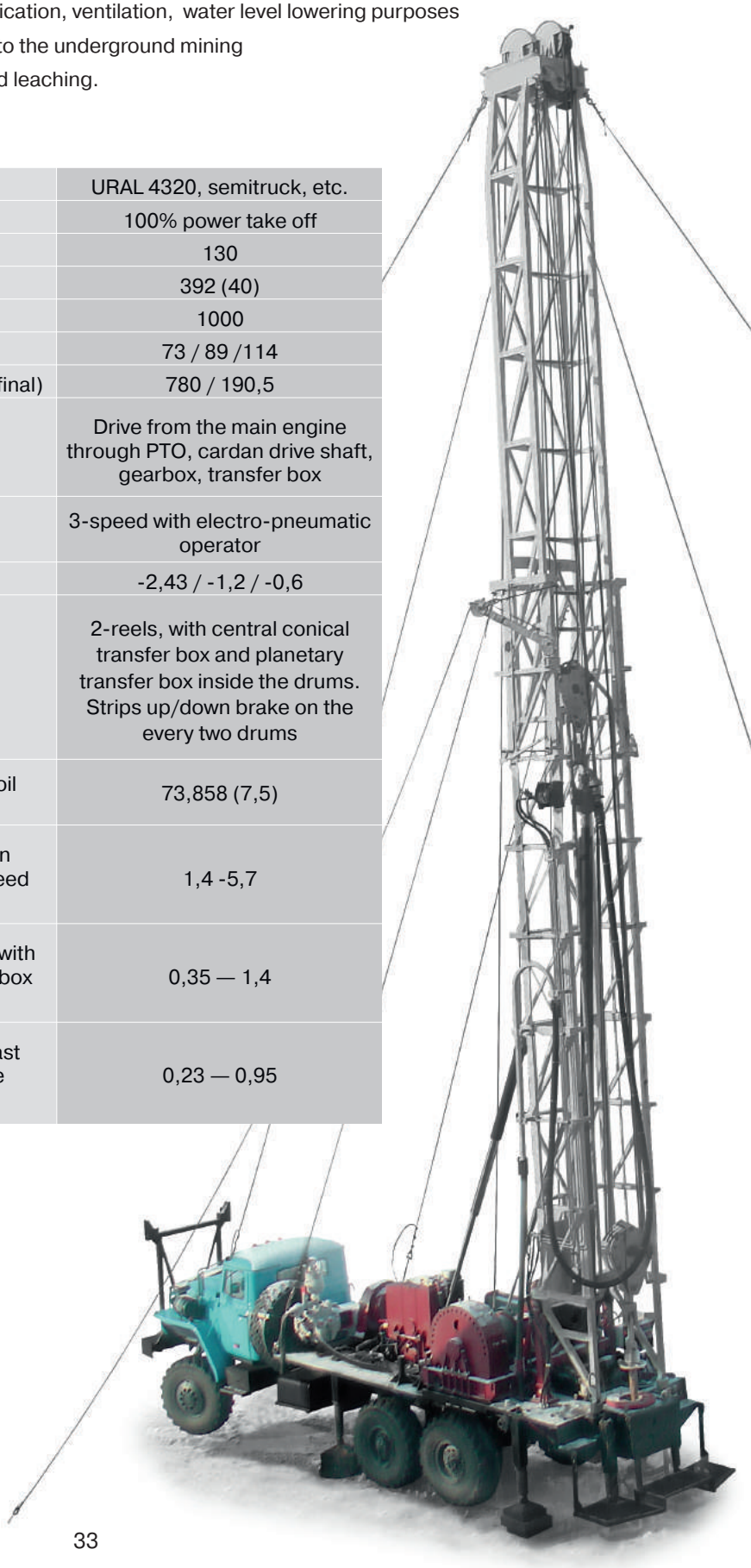

Rotor	RG-425 hydrodriving with hydraulic offtake from the well head
Max. torque kNm (kgfm)	15,96 (1600)
Rotation frequency of the rotation table (r/min)	0-180
Number of the driving speed, provided by the hydraulic scheme	9
Auxiliary winch with the tilt faucet	Hydraulic
Auxiliary winch towing capacity, kN(tf)	21,56 (2,2)
Feeding pipe	Round cross-section with guidelines
Feeding pipe diameter, mm	114
Feeding pipe length, m	7
Mast	Originally constructed with the open front flat, telescopic, vertical
Distance from the rotary table to the crown block axis, m, no more	17,8
Distance from the soil to the crown block axis, m, no more, m	19,3
Drilling pipe length, m	6/12
Distance of the setting pipe, m	12
Crown block	separated
- for the hoist block with the feeding pipe	
Polyspast ratio	2x3, 4-strips mounting
Polyspast payload, kN (tf)	294,3(30)
- for the hoist block hoisting and drilling load cycles	
Polyspast ratio	3x4, 6-strips mounting
Polyspast payload, kN (tf)	392 (40)
Well bottom weight and load control system	EVE-50
Swivel	
Allowed load, kN(tf)	294 (30)
Diameter of the swivel's hole, mm	60
Drilling pump	NB-50
Max. ideal feeding, m3/h (l/s)	39,6 (11)
Max. exit pressure, MPa (kg/sm2)	6,3 (63)
Overall dimensions (transport), mm	
- length/width/height	12500/2500/4000
Overall drilling rig weight, kg	23100

GEOMASH

Additional options

- 16 kW electric generator
- Pump dispenser PAV
- A set of equipment/tools for drilling with reverse water circulation
- Manifold for the additional equipment connection (drilling pump, compressor).

Drilling rig URB-40 onto the URAL-4320 chassis

Implemented drilling methods	Max. diameter, mm
Rotary non-core with water circulation	up to 780
DTH	up to 680
Shock and rotary non-core with reverse airflush (by RC technology)	up to 380
With reverse water circulation (air lift technology)	up to 1000

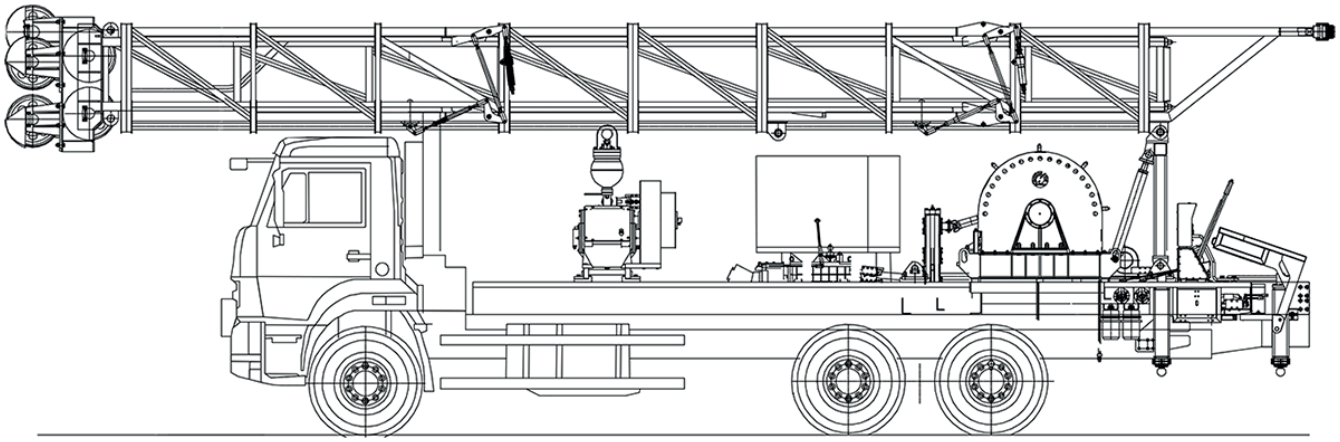

Drilling rig URB-40 on the KAMAZ 65115-3094-48 chassis

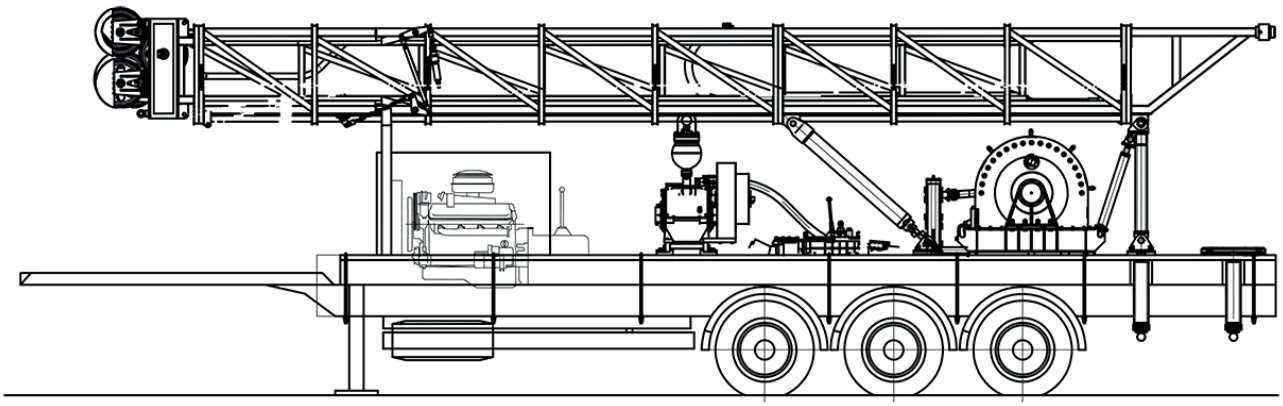

Drilling rig equipment URB-40 on the
ChmZAP-9911.000000.053-PW container semi-trailer

URB-210

Drill rig with hydraulic drive of a mobile rotator

Modification provides:

- Hydrogeological, industrial water well drilling
- Drilling for water depression wells, ventilation bore-holes, bumping wells, energy wells, freezing wells

Technical features

- **1-st Rotary head type:**

- hydraulic with the right side of the well's axis diversion possibility by the hydraulic cylinder operated from the driller's control panel

- hydraulic with rotation in forward direction from the drilling axis up to the 90 degrees angle, which makes safe and rapid hoisting possible during the rig's assembled/disassembled process;

- **2-nd Rotary head type:**

- hydraulic with a side diversion by hidraulic cilinder;

- all of unit's operating elements are hydraulically driven. Because of that additional technological equipments supplying without significant construction design changes is possible. Depending on the rig purpose application could be supplying by drilling rotary heads (technical characteristics could be diffrent from the presented); different hoisting equipments (pipe's rotation/clamp equipments depending from the using diameter). Operational labour intencity decreases in comparison with the mechanical transmission driven drilling rigs;

- hydraulic system operation provides the exact drilling tuning and operational control;

- the driller's workplace is organized on a hinged platform, fixed on the rear side ot the platform rig;

- for the DTH drilling implementation in hard geological-technical conditions rigs could be supplying of lubricator for the immersible DTH machinery;

- wide range of the accessories avalible on request provides the basic operations with the different types of the drilling toos and additional operations mechanisation.

Technical characteristics:

Applied chassis	URAL, KAMAZ, semitrailers
Rig drive	Main vehicle engine through PTO to Transfer box
Nominal power take off capacity, kW	160
Nominal hydraulic system pressure Mpa (kgf/sm2) no less	20 (204)
MAST	Vertical, framework designed
Height, m	12
Payload, tf (kN)	20 (196)
CROWN BLOCK	One string; 2-4 lines stringup
1-st Rotary head version:	For rotary drilling with reverce water circulation drilling (air lift technology) method
Rotary head frequency (1-st range), r/min	0-60
Rotary head torque (1-st range), kgsm	1500
Rotary head frequency (2-nd range), r/min	0-130
Rotary head torque (2-nd range), kgsm	700
Rotary head payload, kgf	20000
Diameter of the Rotary head straight through spindel hole, mm, no less	130
Rotary head equipment set for rotary drilling with reverse water circulation drilling (air lift technology) method with use of separate compressor	Upper swivel with hole 130 mm. Down air swivel with inner tool-joint thread 3-171 for the special drilling pipes and air pressure line connection
2-nd Rotary head version:	For rotary drilling with wash/airflush
Rotary head frequency (1-st range), r/min	0-60
Rotary head torque (1-st range), kgsm	1500
Rotary head frequency (2-nd range), r/min	0-400
Rotary head torque (2-nd range), kgsm	400
Rotary head payload, kgf	20000
Delivery mechanism	Hydraulic cylinder with polyspast-rope delivery mechanism
Max. well bottom towing capacity, tf (kN)	6,5 (64,46)
Max. lifting capacity, tf (kN)	20 (19,5)
Rotary head stroke, m	7,1
Max. drilling rods length, m	6,0
Drilling winch	Hydraulic drive, reversed
Winch towing capacity, tf	3,0/5,0/10,0*
Nominal drilling depth, m:	
- with reverse water circulation (air lift)	150
- with direct wash	800
Drilling diameter, mm:	
- with reverse water circulation (air lift)	up to 1000
- with direct wash initial/final	up to 530 / up to 152

* - by special request

Additional equipment

- Mud pump NB-50 / NB-80
- Compressor KV-12/AK-9/10/Atlas Copco

Implemented drilling methods	Diameter max., mm
Auger drilling	500
Rotary non core with water circulation	490
Shock and rotary non core with airflush	508
Shock and rotary non core with the reverse circulation (RC)	380
Airlift	1000

AZA-3

Drill rig with mechanical drive of a mobile rotator

Modification provides:

- Installation of anchors when fastening extensions of oil-field towers and masts
- Drilling of holes for upsetting anchors

Technical characteristics

Feed stroke, m	3.25
Feed force, kgf:	
- up	12000
- down	4000
Spindle rotation frequency, rpm	14 -101
Torque, max., kgm	2000
Conditional drilling depth, m:	
- augers	50
- auger bores	25
- auger anchors	4.5
Drilling diameter, max., mm:	
- augers	500
- auger bores	1050
- immersion of anchors	350

Technical features

- **Drive of the drilling rig** is carried out from the engine of the transport base via the PTO.
- **Rigs distinction** is the increased value of torque on the rotator spindle.
- **Rotator design** ensures the possibility of its diversion from the well axis.
- **Design simplicity** of the drilling rig and its maintainability in field conditions.

Implemented drilling methods	Diameter, max., mm
Auger drilling	500
Kelly drilling with use of auger drills	1050

Transport base options*	Drive options
	drive from the vehicle engine
ZIL-131	+
URAL-4320	+
KAMAZ	+

* - at request of the customer installation can be mounted on the provided vehicle

USH-2T4/USH-2T4V

Drill rig with mechanical drive of a mobile rotator

Modifications provide:

- Seismic exploration
- Drilling of exploration and appraisal wells
- Drilling of technical wells for construction
- Engineering researches

Technical characteristics

Feed stroke, m	3.25
Feed force, kgf:	
- up	12000
- down	6000
Spindle rotation frequency, rpm	40-240
Torque, max., kgm	750
Conditional drilling depth, m:	
- augers	60
- airflush	100
- DTH pneumoshock	50
Drilling diameter, max. mm:	
- augers	230/530*
- auger bores, mm	650
- with airflush	190.5

* depending on modification

Technical features

- **High torque,** allows to construct a well with a diameter of 170 mm, with a depth of 30 meters within 15 minutes.
- **Feed force up to 12 tons** allows to extract tools from the well without preliminary study of the column.
- **Equipping of USH-2T4 with a pneumatic system** allows, to provide explosive charges redispatching at drilling of seismoprospecting wells.
- **Rotator with increased "handling radius"** for drilling of wells with a diameter up to 650 mm.
- **Considerable mass of the installation** contributes to its stability during drilling and movement operations.
- **Transport base (tractor T10B2121) - of the 10th drawbar category** allows to transport on sledge bases with boring tools, residential trailer and supply of fuel, oil and lubricants.




Transport base options*	Drive options
	Drive from the chassi engine
T10B2121 catarpillar tractor (or analog)	+
MTLBu (7 skating rinks)	+

Application area	Diameter max., mm
Augers with a constant internal diameter	170
Auger	530*
Foundation drilling	up to 650*

* USH-2T4V modification

Additional equipment

- Set of adaptations for pneumoshock drilling (drilling with airflush)
- Hook-on compressor station

SBL-001

Multipurpose drill boom

Modification provides:

- construction and tunnel repairs
- road construction in mountain areas
- restoration of hydraulic engineering constructions
- construction of landslide protection
- construction and restoration of buildings and constructions bases

Technical characteristics

Feed stroke, m	3.3
Feed force, up, kgf	4000
Feed force, down, kgf	2000
Torque, kgm	350
Rotation frequency, rpm	0 ... 400
Spindle drift diameter, mm	60
Diameter of the well, max., mm	330

Technical features

- **Drilling of vertical, inclined, horizontal and rising wells** at construction and repair of tunnels, road construction in mountain areas, restoration of hydraulic engineering constructions, construction of protection against landslide, construction and restoration of the bases of buildings and constructions.
- Management of carriage working bodies is **concentrated on a remote control.**
- Additional equipment set may be issued with **a hydraulic perforator, hydrodriving tube holder, cargo winches.**
- **Function of the rotators side shift displacement** for well clearing is provided.
- **Main functions of the excavator** at the dismantled carriage are maintained.

Implemented drilling methods	Diameter max., mm
Auger	300
Rotary noncore with washing*	190.5
Shock and rotary noncore with airflush*	250
Shock and rotary with use of a hydraulic perforator with installation of piles of TITAN type	52

* - pump and compressor equipment isn't included into the SBL carriage set; it is available separately.

The boring carriage is mounted on hydraulic excavators weighing from 18 tons and drive is given from an excavator hydraulic system.

BKM series 300/500

Boring and crane drill rigs

Modifications provide:

• At electro network construction for Kelly drilling of wells with installation in them of the 0.4-10 kV high voltage line support:
0.4 - 10 kV - BKM series 300; to 35 kV - BKM-550.

• In road construction for drilling and installation of bridge support and fence posts.

• When carrying out various works in oil and gas field, including at construction of transit pipelines and electrohighways, arrangement of oil and gas pipelines.

Technical characteristics

Maximum drilling depth, m:	
- BKM series 300	3.0
- BKM-550	5.0
Drilling diameter, mm	250, 360, 500, 630, 800
Drilling angle, deg:	60-105
Torque, max., Nm (kgm):	
- BKM-350 (360)	5800 (580)
- BKM-370 (371)	5000 (500)
- BKM-550	5800 (580)
Boring tool rotation frequency, rpm:	
- BKM-350 (360)	0..250
- BKM-370 (371)	0..200
- BKM-550	0..250
Feed force, max., kN (kgf), not less:	
- down	24.5 (2450)
- up	32 (3200)
Winch load capacity, max., kN (kgf)	20 (2000)
Hook lifting range, max., m	
- BKM series 300/BKM series 500	6.5/7.7
Average well drilling time d=360-630	15*

* - Average well drilling time d = 500 mm on depth of 3 meters in not frozen soil of III category on drilling capacity.

Technical features

- **High** productivity and functionality.
- **Hydrostatic transmission (GST)** allows to smoothly regulate the rotation frequency and considerably simplifies management of drilling process.
- **High (5 800 Hm) torque** allows to achieve higher speed of well drilling.
- **High spindle rotation frequency** allows to provide more effective cleaning of the auger drill from slime.
- **Control panel** is mounted in the vehicle body, workplace is equipped with seats.
- **Control** of all technological processes is exercised from one panel.
- **Increased loading capacity** (in comparison with analogs) of the crane equipment - 2 tons.
- **Optimum rig configuration** provides access to major components of the BKM.
- **Reinforced** boring bar.

Implemented drilling methods	Diameter, mm
Kelly drilling by bladed auger drills	250-800

Transport base options*	Modifications				
	BKM-350	BKM-360	BKM-370	BKM-371	BKM-550
GAZ-33081 «Sadko»	+				
GAZ-33081 with a five-seater cabin		+			
"Belarus" MTZ-92P tractor			+		
"Belarus" MTZ-82.1 tractor				+	
KAMAZ (4x4)					+

Optional equipment

Detaching device (RU.00.00.000) for safe performance of electric installation works on shabby wooden support of the high voltage line.

GTM-0.8R

Caterpillar vehicle with reclamation equipment

Modification provides:

• Recultivation of petropolluted lands. GTM-0.8R is equipped with a mill with a hydraulic drive and grasp width of 2.0m.

Technical characteristics

Dimensions in operation position, max., mm:	600 mm track	800 mm track
- length	5420	5420
- width	2040	2440
- cab height	2315	2315
- gauge	1420	1620
- base on outer axes of rollers	2400	2400
Carrying capacity, kg	200	200
Weight with cargo, max., kg,	3900	4000
Speed, km/h:		
- maximum	25	25
- minimal stable (at 1500 rpm)	1.1	1.1
- nominal operation	2	2
Speed afloat, km/h	3	3
Speed afloat with lowered cutter, km/h	7-8	7-8
Number of passengers in the cabin	2	2
Track width, mm, not less	600	800
Soil unit pressure, kg /sq.cm, max	0.13	0.11
Cutter:		
- grasp width, mm	2000	2000
- cutter drive	hydraulic	hydraulic
- rotor cutter diameter (at the ends of the blades), mm	500	500
- circumferential force on the cutting edge, kgf	480	480
- rotor speed at nominal operation speed, rpm	to 600	to 600
- cutter immersion depth from the ground surface, mm	270	270

Technical features

• **Hermeticity of the case and low unit pressure** on soil, in the complete set with 800 mm caterpillars of the conveyor, provides effective use on mashy soils; in conditions of high snow cover; allows to overcome water barriers, including — afloat. In summertime, in tundra and forest-tundra areas the conveyor causes minimum damage to soil and vegetable cover.

• Efficient diesel engine with a capacious fuel tank provides **cruising range up to 400 km.**

• Reliable, time-proved main gear and steering clutch control of GAZ-71 have durable life time, **they are simple and effective in service.**

• **Small dimensions** of the transporter allow effective use in forest areas and transportation on public roads, on motor transport with a standard width of a cargo platform.

• **Spacious conveyor cabin,** designed according to requirements of ergonomics, provides the necessary overview, unlike converted demilitarized caterpillar conveyors, and for comfortable work conditions of the driver and passenger, it is equipped with strong and reliable seats (drivers seat is spring-actuated and has weight setup); on windshields electric (mechanical) screen wipers are installed. Control of the conveyor is convenient and ergonomic.

• **Clearance is 480 mm.** It has a highest rate among floating all-terrain vehicles - provides increased passability.

• **Personnel safety** was considered as a top priority task at the development stage. The GTM-0.8R construction provides driver's safety in case of accidents. Wide side doors with convenient hand grips provide easier entrance and exit of personnel and together with the upper emergency hatch guarantee urgent escape. The emergency hatch can be opened in and out.

GTM-0.8R drive is carried out from the diesel Kubota-3800T engine with power of 74 kW (97.6 h.p.)

GTM-0.8E
Caterpillar vehicle with excavator superstructure

Modification provides:

- soli excavation works (trenches, pits, foundation pits digging) with unloading into ehicles or in dump.

Technical characteristics

Transportation condition length	5280
Width with folded excavation superstructure	2610
Cabin level height	2350
Height	2650
Rut, mm	1620
Base by the outer axles track rollers, mm	2400
Weight, kg	4600
Caterpillar type	Rubber-metal
Base engine	Kubota 3800T
Engine capacity, kW/hp	69.6/94.6
Engine rotation rate, r/min	2600
Maximum permit speed, km/h	20
Passengers quantity inside the cabin	2
Crawler width, mm	800
Specific ground pressure with cargo, kg/cm2	0.12
Excavation superstructure MEN-300	
Digging depth, mm no less	3100
Maximum digging radius on parking level, mm no less	3900
Maximum unloading height, mm	2300
Nominal payload, kg	130
Excavator shovel volume, m3	0.1
Maximum rotation angle, degree	180

Technical features

• Sealed body, low specific ground pressure of 0.12kg /cm and the biggest 480mm in such class road clearance is ensured an effective use of the machine in marshy soils, in high snow cover conditions, allowing to reach the place of work or accident independently.

• Japanese diesel engine KUBOTA 3800T, with 94.6 hp capacity, has an increased life period, high torque characteristics and low weight.

• Vehicle practically does not leave a rut on the turf and does not destroy the undergrowth and bushes, therefore it is allowed by environmental organizations to use in most parts of the country.

• High transportability, could be transported inside the back of KAMAZ type vehicle.

• Reliable transmission and running gear parts from GAZ-71 as well as spare parts availability.

• High maneuverability.

• Possibility of machine using in the excavator or recultivation version, and in transport variant in case of the superstructures removing.

• Equipment is designed for operation within temperatures from -40˚C to + 40˚C.

GTM-0.8
Caterpillar vehicle

Modification provides:

Equipment installation
- load capacity of the conveyor allows to use it as chassis for drilling equipment.

Oil and gas sector works
- Installation of cutters for land reclamation, which are contaminated with oil products at major or emergency repair of pipelines;
- patrolling of gas pipelines;
- salvage and rescue operations (emergency service vehicles).

Fire-fighting / salvage and rescue operations
- transportation of people and equipment;
- fire-prevention works.

Energetics operations
- maintenance of transmission lines and energy distribution networks; power lines patrol.

Forestry and greening works
- work on deforestation in the ROW and the technical content of the ROW;
- cleaning of the territory of industrial importance and preparation of construction sites.

Technical characteristics	passenger version	cargo version (800 mm track)	cargo version (600 mm track)	cargo-passenger version (800 mm track)
Dimensions, max., mm:				
- length	4550	4550	4550	4700
- width	2040	2440	2040	2440
- cabin height	2315	2315	2315	2415
- gauge	1420	1620	1420	1620
- base on outer axes of rollers	2400	2400	2400	2400
Carrying capacity, kg	200	600	800	450
Weight with cargo, max., kg	3800	3800	3800	4300
Dimensions of the loading platform, mm				
- length	-	1300	1300	1300
- width	-	1600	1600	2100
Maximum speed, km/h	40	25	40	25
Speed afloat, km/h	3	3.5	3	3.5
Number of passengers in the cabin	6	2	2*	5
Track width, mm, not less	600	800	600	800
Soil unit pressure, max., kg /sq.cm	0.13	0.11	0.13	0.11
Cabin width, mm	1600	1600	1600	2100

* - it is possible to make with 3 seats.

Technical features

- **Reliable knots:** transmission of GAZ-71, undercarriage on the basis of basic skating rinks and a GAZ-71 caterpillar track. Reliability of the undercarriage and transmission are verified at operation of GTM conveyors in difficult conditions of the forest-tundra in Western Siberia and tundra of the Nenets Autonomous Area.
- **Small unit pressure upon soil** (opportunity to use the conveyor on soil with low bearing ability - bog, snow).
- **Small dimension on width (1.87 m) and Light weight (to 4 tons)** allows to use the conveyor in forested areas with minimum damage to the environment, and also to transport it on unspecialized cargo motor transport.
- **Tightness of the case** and existence of boards of the GTM allows to overcome water barriers.
- **Efficient diesel engine** and low fuel rate 5..6 l/h (fuel distance - 400km, fuel tank – 70l).
- **Spare parts availability.**
- **Large area of cabin glazing** provides clear vision at the movement on cross-country terrain.
- **High maneuverability.**

GTM-1.4
Caterpillar vehicle

GTM-1.4 vehicle is the unique in the class of all-terrain machines by payload score up to 1,5 tons and special technical solutions and characteristics as well.

Modification provides:

GTM-1.4 can be used in all sectors of national economy (oil and gas, power industry, fire fighting, rescue/emergency services, forestry, hunting, etc.), in areas with marshy ground and high winter snow covering:

• peoples, maintaining and repair team, different types of goods transportation - rescue/emergency operations (rescue service vehicles), patrolling services (pipelines, power lines, fire fighting service etc.)

• “trampling” of roads for wild animals and snowmobiles like “snowstorm” & “lynx” passage.

Technical characteristics

Dimensions, mm.	
-length	5650
-width	2440/2640
- height: cabin/total	2420/2480
- width: cabin and whole body	2020
Quantity of rollers by one side (excluding idle rollers)	5
Gauge, mm	1840
Base on outer axes of rollers, mm	3200
Payload, kg	1400
Weight with cargo, kg	4200/4400
Caterpillar’s type	rubber-metal
Dimensions of the loading platform, mm	
- length excluding the bonnet	2330
- width	1950
Engine	KUBOTA 3800T
Engine power kW/hp	69,6/94,6
Nominal rotation speed r/min	2600
Max. speed, km/h	40
Speed afloat, km/h	6
Number of passengers in the cabin	3
Track width, mm	600/800
Specific soil unit pressure, kg/sq.cm – up to	0,15/0,115

Technical features

- Low specific soil pressure - 0.115 kg / sq.cm with load of 1400 kg (in case of GAZ-34039 - 0.213 kg/sq.cm), that is the best result among all-terrain vehicles
- Clearance of 480mm VS 400mm of MT-LB and GAZ-34039 vehicles, gives a driving opportunity on any types of bogs and snows.
- Does not leave a track on the turf; does not destroy the undergrowth and shrub planting. Because of that is approved for using in most of the country's areas by environmental organizations
- Water barriers overcoming, afloat speed is 4-6 km/h.
- The unique tracks design makes it possible to use this machine "in one array" with all types of caterpillar all-terrain vehicles (like MT-LB and GAZ-71 (34039)).
- High transportability, can be transported inside KAMAZ truck body with 600 mm track size without dismantling of it.
- Reliable KUBOTA 3800T Japanese diesel engine obtains of prolonged life circle, high torque characteristic and less weighted.
- A power take-off unit capacity allows to install an additional welding/drilling equipment, generator, powerful winch, recultivation cutter, excavating equipment etc.
- Two cabin variants, 3 seats per one row and 6 seats per two rows (driver's seat included).

GTM-4.0
Caterpillar vehicle

GTM-4.0 is a vehicle with payload class of up to 4 tons.

Driving by YMZ-238V (power 240hp) diesel engine. Power for additional equipment withdraws from the engine though a power take off gear case.

Produced in passenger and cargo-passenger versions or used for technological equipment installation of different purposes.

Modification provides:

Equipment installation:

- could be used like a chassis for drilling, welding, generator etc. equipment installation because of matched payload and special designed power take off gear case.

Oil and gas industry:

- pipelines maintenance (patrolling, repair, etc.)
- peoples, maintenance and repair crews transportation to a work place
- transportation of goods for various purposes
- rescue operations (emergency vehicles)

Fire fighting/ rescue operations

- water, peoples and equipment delivering to ta burning area
- fire protection works

Power industry

- maintenance of power transmission and distribution lines (patrolling, repair, etc.)
- peoples, maintenance and repair crews transportation to a work place
- transportation of goods for various purposes
- rescue operations (emergency vehicles)

Transportation

- peoples and cargoes delivering through marshy ground (bogs, snow covered virgin land, etc.) in various climatic conditions, Extreme North incl.
- winter road “trampling”

Technical characteristics

Operational weight (excl. cargo&crew; incl. spare parts kit, full fueling and equipped), kg	9700+/-2,5%
Payload (excl. towing trailer), kg	4000
Towing weight, kg	up to 6500
Number of seats	
- inside the cabin	2
- into the platform	11
Overall dimensions, mm	
- length	6454
- width on narrow and wide caterpillars	2850/3150
- height	1865
Gauge, mm	2500
Ground clearance, mm	395-415
Specific soil unit pressure, kg/sq.cm	
- narrow caterpillar without cargo	0,45
- wide caterpillar without cargo	0,28
- wide caterpillar with cargo	0,33
Max. speed, km/h	60
Speed afloat, km/h	5-6
Fuel consumption in loaded condition with trailer, l	
- per one hour	43-44
- 100 km of driving	90-100
Fuel reserve, km	500
Engine	YMZ-238V
Power, hp	240
Nominal rotation speed, r/min	2100
Fuel tanks, l	4 pieces x 250 l
Width of caterpillar belt, mm	
- narrow	350
- wide	560

Technical features

For the GTM-4.0 production is used previously military conversion track trailer MT-LB (6 rollers). It undergoes by:

• Complete machine dismantling with body's leaks checking, overhaul if necessary

• New cabin with side doors manufacturing

- Machine's components and engine repairing (track belts, rollers, stabilizers, torsion, driving chain gears)

• Transmission machine components repairing (main gear, gears reduction box, clutch). Provides with complete disassembling and inner bearing, rubber, seal details replacement with aftermath checking on special measurement stand.

• Engine repair (complete disassembling and overhauling with aftermath all systems checking on special measurement stand)

• Electrical wires/equipment and control devices repairing with subsequent replacement or overhaul

• High-strength steel body, specially designed power take off for 200 hp, 240 hp engine power allows to install various technological equipment and transported cargoes up to 4 tons.

• Big cabin with side doors is suitable for 2 people comfortable transportation with up to 11 peoples inside cargo-passenger part of vehicle. Powerful cab heating and starting heater allows to use a machine in different climatic conditions as well as in Extreme North area.

• Wide 560 mm. size track and 400 mm. ground clearance allows to move confidently in areas with marshy ground and high winter snow covering (bogs, snow virgin soil etc.)

• Reliable transmission and running machine components, available spare parts

• Hermetically sealed body and boards presence allows to overcome water barriers.

• Large area of cab glazing provides clear vision at the movement on cross-country terrain.

• Tow hitch allows to haul a trailer with load capacity of up to 6.5 tons.

• High maneuverability.

GTM-6.0
Caterpillar vehicle

GTM-6.0 is a vehicle with payload class of up to 6 tons.

Driving by YMZ-238H / 238BL-1 (power 300 hp / 310 hp) diesel engine. Power for additional equipment withdraws from the engine though a power take off gear case.

Produced in cargo-passenger versions or used for technological equipment installation of different purposes.

Modification provides:

Equipment installation

- could be used like a chassis for drilling, welding, generator, fuel filling stations, mobile crane-manipulators, laboratories, workshops etc. equipment up to 6 tons installation because of matched payload and special designed power take off gear case.

Oil and gas industry

- peoples, maintenance and repair crews transportation to a work place
- transportation of goods for various purposes
- rescue operations (emergency vehicles)

Fire fighting/ rescue operations

- water, peoples and equipment delivering to ta burning area
- fire protection works

Power industry

- maintenance of power transmission and distribution lines (patrolling, repair, etc.)
- peoples, maintenance and repair crews transportation to a work place
- transportation of goods for various purposes
- rescue operations (emergency vehicles)

Transportation

- peoples and cargoes delivering through marshy ground (bogs, snow covered virgin land, etc.) in various climatic conditions, Extreme North incl.
- winter road “trampling”

Technical characteristics

Operational weight (excl. cargo&crew; incl. spare parts kit, full fueling and equipped), kg	13500+/-2,5%
Payload (excl. towing trailer), kg	6000
Trailer payload, kg	6500
Specific soil unit pressure loaded, kg/sq.cm – up to	0,37
Specific soil unit pressure unloaded, kg/sq.cm – up to	0,27
Number of seats	
- with driver	5
- inside the cabin	5
Overall dimensions, mm	
- length	7288+/-50*
- width	3150
- height	3000*
Gauge, mm	2500
Base, mm	4445
Ground clearance, mm	395-415
Max. speed, km/h	55
Max. heeling angle, degree	25
Max. climbing angle, degree	35
Engine	YMZ-238H or YMZ-238BL-1
Average fuel consumption per 100 km, l	100-136
Power, hp	300 / 310
Fuel reserve, km	500
Width of caterpillar belt, mm	560 (wide)

Technical features

For the GTM-6.0 production is used previously military conversion track trailer MT-LBu (7 rollers). It undergoes by:

- Complete machine dismantling with body's leaks checking, boards build up or new cab manufacturing, overhaul if necessary
- New cabin with side doors manufacturing
- Machine's components and engine repairing (track belts, rollers, stabilizers, torsion, driving chain gears)
- Transmission machine components repairing (main gear, gears reduction box, clutch). Provides with complete disassembling and inner bearing, rubber, seal details replacement with aftermath checking on special measurement stand. - Engine repair (complete disassembling and overhauling with aftermath all systems checking on special measurement stand)
- Electrical wires/equipment and control devices repairing with subsequent replacement or overhaul
- High-strength steel body, specially designed power take off for 200 hp, 310 hp engine power allows to install various technological equipment and transported cargoes up to 6 tons.
- Big cabin with side doors is suitable for 5 people comfortable transportation with up to 11 peoples inside cargo-passenger part of vehicle. Powerful cab heating and starting heater allows to use a machine in different climatic conditions as well as in Extreme North area.
- Wide 560 mm. size track and 400 mm. ground clearance allows to move confidently in areas with marshy ground and high winter snow covering (bogs, snow virgin soil etc.)
- Reliable transmission and running machine components, available spare parts.
- Large area of cab glazing provides clear vision at the movement on cross-country terrain.
- Tow hitch allows to haul a trailer with load capacity of up to 6.5 tons.
- High maneuverability.

Lutz Kurth

Drilling rigs of the KV series and boring carriages «Lutz Kurth» (Germany)

Drilling rigs of the KV series are intended for drilling on water, construction of technological wells for geothermal probiug, and also for drilling of engineering-geological and construction wells.

Rigs of the KV series realize all technologies of rotational drilling, as "dry" - auger, and wash/airflush with use of propeller and rolling drilling bits, and also technology of shock and rotational drilling using submercible pneumatic impact tools (DTH).

Boring carriage - drilling rig used as hinged equipment on excavators, pointing devices and other hydraulic carriers and also as a mobile option.

KV 10

Width/Height in operation postition:
720-960/3000 and 4300 mm
Weight: 1200 kg
Engine drive: 15 kW
Drilling dry with upsetting:
Ø max. - 178 mm, L max. - 20 m
Drilling by hollow augers:
Ø max. - 219 mm, L max.-15 m
Drilling with wash:
Ø max. - 190 mm, L max. - 50 m
Drilling by DTH tools:
Ø max. - 190 mm, L max. - 50 m

KV 13

Width/Height in operation postition: 780-1000/3760 and 5060 with an extender
Weight: 1950 kg
Engine drive: 22.5 kW
Drilling dry with upsetting:
Ø max. - 219 mm, L max. - 10 m
Drilling by the hollow screw:
Ø max. - 185 mm, L max. - 20 m
Drilling with wash:
Ø max. - 190 mm, L max. - 75 m
Drilling by DTH tools:
Ø max. - 150 mm, L max. - 75 m

KV 20

Width/Height in operation position:
820-1200/4690 and 5990 mm
Weight: 3400 kg
Engine drive: 53.7 kW
Drilling dry with upsetting:
Ø max. - 219 mm, L max. - 20 m
Drilling by hollow augers:
Ø max. - 195 mm, L max. - 40 m
Drilling with wash:
Ø max. - 190 mm, L max. - 100 m
Drilling by DTH tools:
Ø max. - 190 mm, L max. - 100 m

KV 25

Width/Height in operation position: 1500/6692 mm (with 2 extenders)
Weight: 5900 kg
Engine drive: 53.7 kW, 70 kW
Drilling dry with upsetting:
Ø max. - 219 mm, L max. - 20 m
Drilling by the hollow screw:
Ø max. - 195 mm, L max. - 40 m
Drilling with wash:
Ø max. - 190 mm, L max. - 150 m
Drilling by DTH tools:
Ø max. - 190 mm, L max. - 150 m

KV 30

Width/Height in operation position:
1500/6300 mm
Weight: 6650 kg
Engine drive: 95 kW
Drilling dry with upsetting:
Ø max. - 219 mm, L max. - 20 m
Drilling by hollow augers:
Ø max. - 195 mm, L max. - 40 m
Drilling with wash:
Ø max. - 190 mm, L max. - 150 m
Drilling by DTH tools:
Ø max. - 190 mm, L max. - 150 m
Core drilling:
Ø max. - 146 mm, L max. - 150 m

Hinged equipment (drill carriages)

Lutz Kurth produces a wide selection of drill carriages:

- light series (**LBL-1200 portable LBL -1200, and BAG-15**), depth of drilling is up to 40 m;

- universal drill carriages (**from MBL 18 to MBL 65**), depth of drilling is up to 75 m.

Service

Warranty and post-warranty maintenance of "Geomash" boring machines

"Geomash" drilling equipment conforms to operating Standards of the Russian Federation and Specifications of the manufacturer.
Warranty on drilling rigs (hinged equipment) by manufacturer is 12 months from the date of commissioning, but no more than 18 months from the date of shipment from manufacturers warehouse.

On the basis of manufacturers of OJSC Geomash and LLC Geomash-Vladimir mobile service crews which realize warranty and post-warranty repair of boring technique "Geomash" are organized.

30 min Request response

60 min Service decision adoption

Products and service

OJSC Geomash	LLC Geomash-Vladimir	LLC Geotechnik
Service:	**Service:**	**Service:**
PBU-2	BBU 000 "Openok"	URB-210
LBU-50	BBU 001 "Openok-S"	GTM-4.0
UBV-318/320	MBU	GTM-6.0
AZA-3	UGB	
USH-2T4/USH-2T4V	SBL-001	
URB-40		
BKM series 300/500		
GTM-0.8		
GTM-0.8R		
GTM-0.8		
GTM-1.4		

GEOMASH

Service Centers

OJSC "Geomash"
Kursk region, Shchigra, Krasnaya St., 54
tel.:+7 (910) 731-84-73

Quality assurance engineer "Department after-sales service ":
- Vladimir Pikalov

e-mail: service@geomash-zavod.ru
otk@geomash-zavod.ru

LLC "Geomash-Vladimir"
Vladimir, Promyshlenny Drive, 5B
tel.:+7 (910) 091-41-02

Guarantee and service engineer:
- Dyuzhkov Mikhail Mikhailovich

e-mail: service@geomash-vladimir.ru

Repair of "Geomash" drilling equipment can be performed in specialized service centers, certified by the manufacturer.

LLC "Trakmaster"
city of Tyumen, D. Bedny St., 104, of.64,
tel./fax: +7 (3452) 69-68-70, tel./fax of the branch LLC Trakmaster in Surgut: +7 (3462) 22-45-16

LLC "Geomash-Yug"
Krasnodar region, Novotitarovskaya st., Gogol Str. 54, tel. /fax: 8 (86162) 4-35-35

LLC "IrkutTehSnab"
Irkutsk region, Irkutsk, Chelyabinskaya St., 25,
tel./fax: 8 (3952) 50-82-63; 52-94-30

OJSC "Geomash"
Ukraine, Donetsk region, Hartsyzsk, Oktyabrskaya St., 51/77,
tel./fax: 8-10-380(6257) 7-65-9

After sales service

Demonstration of products before shipment

Specialized customer services realize demonstration of boring and cross-country technique before their shipment, and also provide training of staff of the Customer.

Check, running-in and start-in operation of the boring equipment in customer conditions

Our experts will help to put the "Geomash" equipment into operation that will help to avoid breakages and reduce down time of the equipment.

Information and technical attending

We realize information and technical attending to the customer in case of operation at all stages of life of the equipment, and also we provide operational warranty and post-warranty repair of any complexity.

Major repair of drilling rigs

Service in changeover of the failed nodes on earlier issued drilling rigs of "Geomash" production.

LLC «Geomash-Centre»
121351, Moscow, Kuntsevskaya St., 9, build. 2
tel/fax: +7 (495) 902-55-20
FTA department tel: +7 (495) 902 5520 ext. 220
www.geomash-group.com, e-mail: sales@geomash.ru